Ziasure

Fixation pin and screw system

Ziacom®
A Ziacom Group Company

Ziasure

Fixation pin and screw system

Ziacom®

Publication - February 2025 - Rev-03 | Ziacom ® All rights reserved

Important information

Please read carefully before using Ziacom® products

General information

This document contains basic information on the use of original Ziacom® dental implant systems, hereafter referred to as "Ziacom® dental implants" or simply "Ziacom® products". This document has been created as a quick guide for clinicians responsible for treatment, hereafter the"user", and therefore, is neither an alternative nor a substitute for specialised training or professional clinical experience.

Ziacom® products must be used according to a suitable treatment plan and in strict compliance with the manufacturer's surgical and prosthetic protocols. Carefully read the product-specific surgical and prosthetic protocols and the instructions for use and maintenance before using any Ziacom® product. You can find this information on our website, www.ziacom.com, or request it from your nearest authorised Ziacom® distributor.

Liability, safety and warranty

The instructions for the use and handling of Ziacom® products are based on internationally published literature, current clinical standards and our clinical experience so they should be understood as general guidance. The handling and use of Ziacom® products is the sole responsibility of the user as it is outside the control of Ziacom Medical SL. Ziacom Medical SL, its subsidiaries and/or its authorised distributors disclaim all responsibility, whether explicit or implicit, total or partial, for possible damage or injury caused by poor handling of the product or any other situation not considered in their protocols and manuals for the correct use of their products.

The user must ensure that the Ziacom® product is appropriate for the intended procedure and end purpose. Neither these instructions for use nor the work or handling protocols for the products release the user from this obligation. Ziacom® products must be used, handled and applied by clinicians with the appropriate training and qualifications required according to current legislation in each country.

The total or partial use, handling and/or application of Ziacom® products at any stage of their implementation by personnel who are unqualified or lack the necessary training will automatically void any type of warranty and may cause severe damage to the patient's health.

Ziacom® products are part of their own system, with their own design characteristics and work protocols, including dental implants, abutments or prosthetic components and surgical or prosthetic instruments. The use of Ziacom® products in combination with elements or components from other manufacturers could result in treatment failure, damage to tissues or bone structures, inadequate aesthetic outcomes and severe damage to the patient's health. Therefore, only original Ziacom® products should be used.

The clinician in charge of the treatment is solely responsible for ensuring the use of original Ziacom® products and that they are used according to the corresponding instructions for use and handling protocols throughout the implant procedure. The use of any other non-original Ziacom® components, instruments or products, whether alone or in combination with any original Ziacom® products, will immediately void the warranty of the original Ziacom® products.

See the Ziacom Medical SL Warranty Programme (available on the website or by contacting Ziacom Medical SL, its subsidiaries or authorised distributors).

Warning. Not all Ziacom® products are available in all counties. Check availability in your country.

The Ziacom® brand and the names of other products and services, including their logos, that are mentioned in this document or on the website www.ziacom.com are registered trademarks of Ziacom Medical SL.

Ziacom Medical SL reserves the right to modify, change, remove or update any of the products, prices or technical specifications referenced on this website or in any of its documents without prior notification. All rights reserved. The reproduction of this document, whole or in part and in any medium or format, without the corresponding written authorisation from Ziacom Medical SL is prohibited.

Together for
health

Index

The Company 06
- Together for health 06
- Ziacom® quality 06
- Zitium® Titanium 06
- Investment in innovation and training 07
- Ziacom® across the globe 07
  - Regional headquarters 07
  - Subsidiaries 07

Ziasure fixation pin and screw system

ZS1 fixation pin 10
- Features 10
- Recommendations for use 11
- Diameters, lengths and product codes 11
- Product presentation 12
- Instructions for opening ZS1 fixation pins 12
- How to use this catalogue 13
  - Product data sheet / Key to symbols 13
- Surgical instruments 16
- Surgical protocol 18

ZS2 short bone fixation screw 22
- Features 22
- Recommendations for use 23
- Diameters, lengths and product codes 23
- Product presentation 24
- Instructions for opening ZS2 short bone fixation screw 24
- Surgical instruments 26
- Surgical protocol 28

Other products 32

Cleaning, disinfection and sterilisation 36

The Company

Together for **health**

Ziacom® has been working for more than 20 years to improve the **oral health** and well-being of patients around the world by **designing and manufacturing innovative,** high-quality dental implant, prosthetic component, surgical instrument and biomaterial solutions.

The company was founded in 2004 with **100% Spanish capital** and began its activity as a manufacturer of dental implants and attachments for several European companies before later launching its own **brand of implant systems** in 2006.

In 2015. Ziacom® introduced its **diversification strategy** with the development of **new business lines** and new product lines and the launch of a **new portfolio**, which helped the company achieve a **15% share of the Spanish market** in 2016 with the sale of more than 230.000 implants.

In 2022. the company began an **ambitious growth plan** with new goals of **international expansion**, broadening and **diversification** of its portfolio **of products and services** and a change in corporate identity.

Ziacom® quality

Commitment to **quality and innovation** has been part of the values and the essence of Ziacom® since the beginning.

That is why we use state-of-the-art technology in **every stage of our products' production cycle**, from **design and manufacture** to **quality assurance, cleaning and packaging**. All of our products are also manufactured using only **high-quality raw materials** after applying **strict controls to select** our main suppliers.

Ziacom Medical S.L. is a **licensed manufacturer of medical devices** and an **AEMPS (Spanish Agency of Medicines and Medical Devices)** 6425-PS marketing authorisation holder. Our **quality management system is certified** in accordance with the requirements of ISO standards 9001:2015 and 13485:2018. and is also GMP 21 CFR 820 compliant.

Ziacom GUARANTEE LIFETIME Dental **implants**

Ziacom GUARANTEE 15 YEARS Prosthetic **abutments**

Thanks to our ceaseless endeavours to offer our clients unsurpassable quality, all our implants have a **lifetime guarantee**.

See the General Conditions for Accessing the Warranty for Ziacom® products.

Grade 5 ELI titanium

The **Ziasure** fixation system by Ziacom® is made from **Grade 5 ELI titanium (medical grade) Ti 6Al 4V and Grade 2 titanium (medical grade),** which offer better mechanical properties. The **Ziasure** fixation system by Ziacom® is marketed in an unsterilised condition.

Ziacom® Titanium Grade 5 for medical use Ti 6Al 4V

Ziacom® Titanium Grade 2 for medical use

Made with **Grade 5 ELI Titanium and Grade 2 Titanium,** our implants meet the requirements of ASTM F67 and ISO 5832-3. and are certified in accordance with EU Regulation 2017/745. attaining the corresponding CE marking from notified body 0051.

IMQ CERTIFIED IMQ CERTIFIED IQNET CE CE 0051

FDA Approved*

*See approved models

IMPORTANT
All the products listed in this Ziacom® catalogue are supplied unsterilised and must be sterilised before use.

Non sterile

Investment in innovation and training

In order to always offer the very best solutions for the **well-being of every patient**, and thanks to the experience and dedication of our **highly-qualified professionals** and **innovative Technological Centre**, our R&D&I team works incessantly in the field of **research and innovation** to **improve** our products and develop **new solutions** to meet the demands and needs of both patients and dentists.

We also invest in **research** and **ongoing training** as a way of providing **scientific support to the sector** and we firmly believe in training **young professionals** to best ensure **advances in the dentistry field**.

We therefore work closely with **training centres, universities and scientific bodies** to create a practical and specialised teaching environment to promote and strengthen their knowledge, abilities and professional growth.

In order to enhance our investment in the training and **development of dental professionals**, we have **specific areas at our facilities for hands-on training** and **practicals**, **state-of-the-art** training equipment and also a **physical and virtual showroom** where professionals can see all our dental solutions first hand.

Ziacom® across the globe

We are committed to making oral health available to patients all over the world and have a solid **internal growth and expansion plan** to increase the company's **international presence** in those **areas where our products are already well-established** and to **expand into new areas**.

In order to achieve this, we offer our **international associates** a **trusting and collaborative** partnership by adapting to their **local needs** and providing solutions that are specific to each market.

As part of our commitment to meet the specific **quality, regulatory and legal requirements of each country**, for both the registration and distribution of our products, we have **specific certifications** from each of the countries in which we trade.

Regional headquarters

Ziacom Medical

Madrid - SPAIN
Calle Búhos, 2 - 28320 Pinto
+34 91 723 33 06

Subsidiaries

Ziacom Lusobionic

Av. Miguel Bombarda, 36 - 5° B
1050 -165 - Lisbon - PORTUGAL
+351 215 850 209

Ziacom Medical USA LLC

Miami - USA
333 S.E 2nd Avenue, Suite 2000
Miami, FL 33131 - USA
+1(786) 224 - 0089

Ziacom ITS

Viale del Lavoro, 14
35010 Vigonza
Padova - ITALY
+39 049 603310

Ziacom Safe implant

Av. Iñaquito, Edificio Metropolitan,
Oficina 304
170507, Quito - ECUADOR
+593 96 368 0879

Please see the up-to-date list of Ziacom® distributors at **www.ziacom.com** or email us at **export@ziacom.com**

Ziasure

ZS1

Fixation pins

Fixation pin ZS1

Ziacom® Ziasure ZS1 fixation pins have been developed to be used in guided bone regeneration (GBR) procedures. Their main function is the securing of membranes, both resorbable and non-resorbable.

The Ziasure ZS1 fixation pin provides immobilisation of the membrane, which promotes and improves predictability in bone regeneration processes.

Features

RETENTION ZONE

- Head Ø2.5 mm: allows better distribution of the impaction force.
- 0.90 mm hexagonal connection: allows the fixation pin to be removed once treatment has finished.
- Flat base: improves stability of the fixation pin and prevents the membrane from being cut or perforated.

BODY

- Anchorage area: improves stability of the pin.
- Threaded area: facilitates removal of the fixation pin once treatment has finished.
- Overall lengths: 3.30 mm and 5.50 mm.

TIP

- Sharp tip: allows insertion into soft and hard bone without drilling.

MATERIAL

- Grade 5 ELI titanium (medical grade) Ti 6Al 4V

Short pin (Ø0.70 mm)

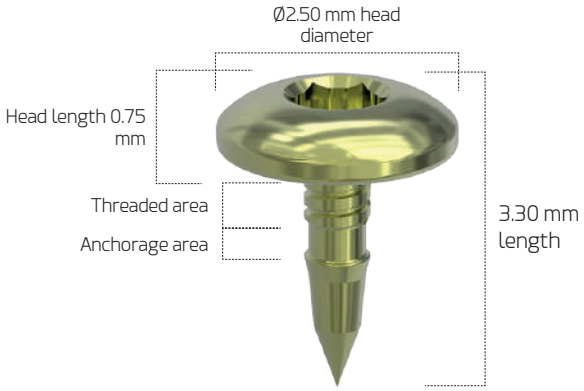

Long pin (Ø1.10 mm)

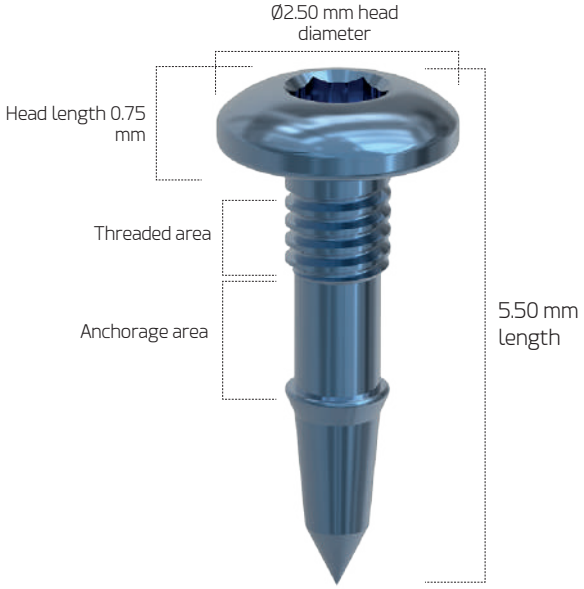

Recommendations for use

Ziacom® Ziasure® ZS1 pins are indicated for fixation and stabilisation of both resorbable and non-resorbable membranes during Guided Bone Regeneration (GBR) procedures.

There are two types of Ziacom® Ziasure® ZS1 fixation pins:

ZS1 FIXATION PIN - 0.70x3.30 mm:

- Fixation of collagen, synthetic and PTFE (with or without Ti reinforcement) membranes in Seibert class I and II bone.

ZS1 FIXATION PIN -1.10x5.50 mm:

- Fixation of collagen, synthetic and PTFE (with or without Ti reinforcement) membranes in Seibert class III and IV bone.
- Little fixation achieved with ZS1 3.30 mm pins.
- Fixation of grafts in mucogingival surgery.

NOTE
It is recommended that ZS1 fixation pins are removed once treatment has finished. Maximum duration of use is 12 months.

Diameters, lengths and product codes

						REFERENCES	
		DIAMETER	LENGTH	HEAD Ø	ANODISED	5 UNITS	10 UNITS
Ziasure ZS1 Fixation pin - Short		0.70	3.30	2.50		PS3305	PS3310
Ziasure ZS1 Fixation pin - Long		1.10	5.50			PS5505	PS5510

Dimensions in mm.

IMPORTANT
Ziasure ZS1 fixation pins are supplied non-sterile.

Fixation pin ZS1

Product presentation

Ziasure ZS1 fixation pins come in a carton sealed with a product label, allowing immediate identification. Each box contains:

- **Ziasure ZS1 fixation pin blister pack**: heat-sealed, with product labels for correct traceability. There is a flap for easy opening in the surgery while preventing accidental opening.
- **Product label information:** product code, diameter and length of the Ziasure ZS1 fixation pins, product description, batch number, manufacturer, date of manufacture and symbols identifying the product.

IMPORTANT
Ziasure ZS1 fixation pins must not be sterilised in their original packaging or with the plastic vial.

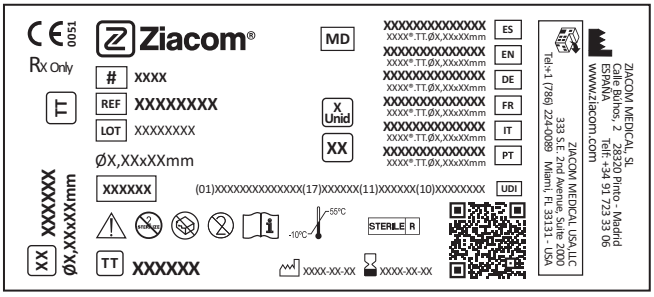

Description of the symbology used

CE XXXX	CE marking (MDR) and notified body number.		Do not use if package is damaged.
MD	Medical device symbol.		Single-use product.
#	Model code.		Consult instructions for use.
REF	Product name.		Product use-by date.
LOT	Product batch number.		Date of manufacture.
UDI	Unique device identifier.		Manufacturer.
STERILE R	Sterilised by radiation.	TT	Titansure surface treatment.
	Temperature limit.	TTA	Titansure Active surface treatment.
	Caution, consult attached documentation.	Rx Only	Prescription only.
	Do not resterilise.		Product distributor.

For full details on the product presentation and instructions for use (IFU), go to **www.ziacom.es/ifus** or scan the QR code on the box.

Instructions for opening ZS1 fixation pins

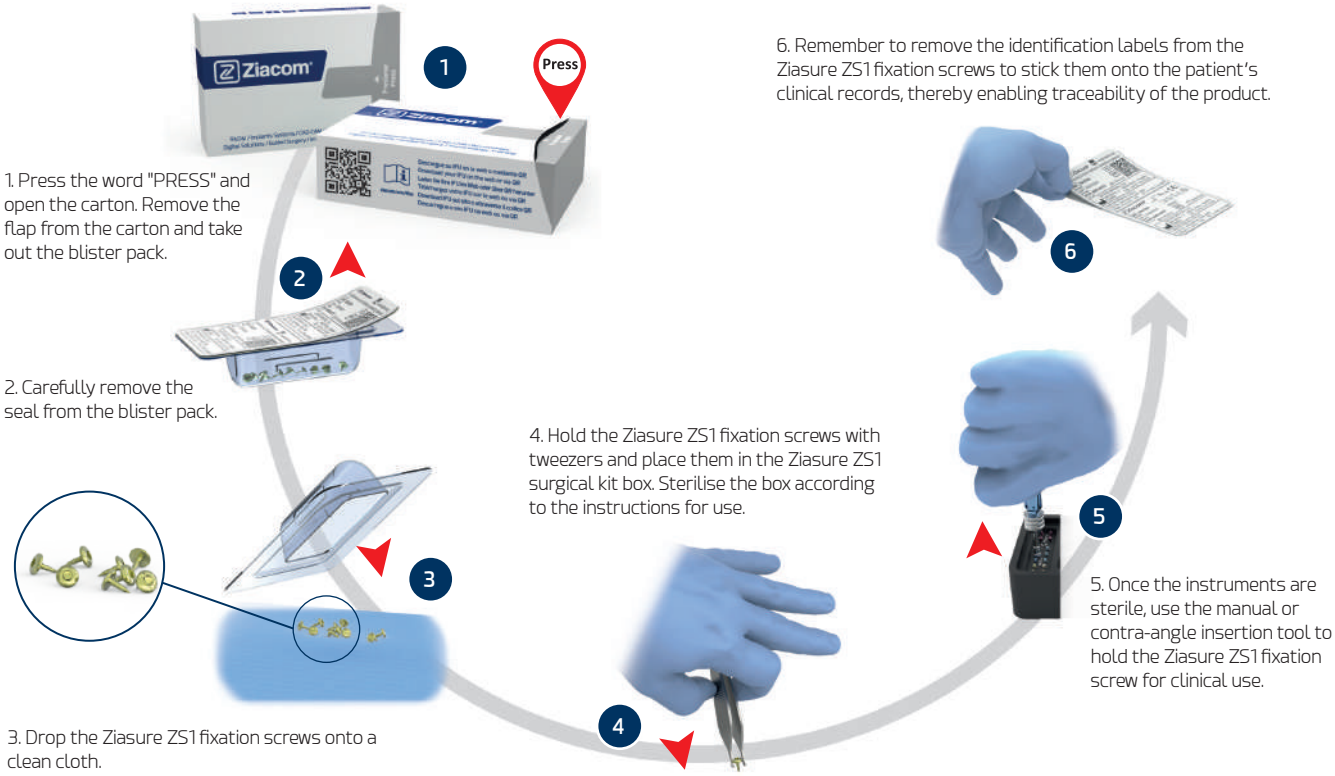

1. Press the word "PRESS" and open the carton. Remove the flap from the carton and take out the blister pack.

2. Carefully remove the seal from the blister pack.

3. Drop the Ziasure ZS1 fixation screws onto a clean cloth.

4. Hold the Ziasure ZS1 fixation screws with tweezers and place them in the Ziasure ZS1 surgical kit box. Sterilise the box according to the instructions for use.

5. Once the instruments are sterile, use the manual or contra-angle insertion tool to hold the Ziasure ZS1 fixation screw for clinical use.

6. Remember to remove the identification labels from the Ziasure ZS1 fixation screws to stick them onto the patient's clinical records, thereby enabling traceability of the product.

IMPORTANT
Ziasure ZS1 fixation screws are supplied unsterilised.

Product sheet

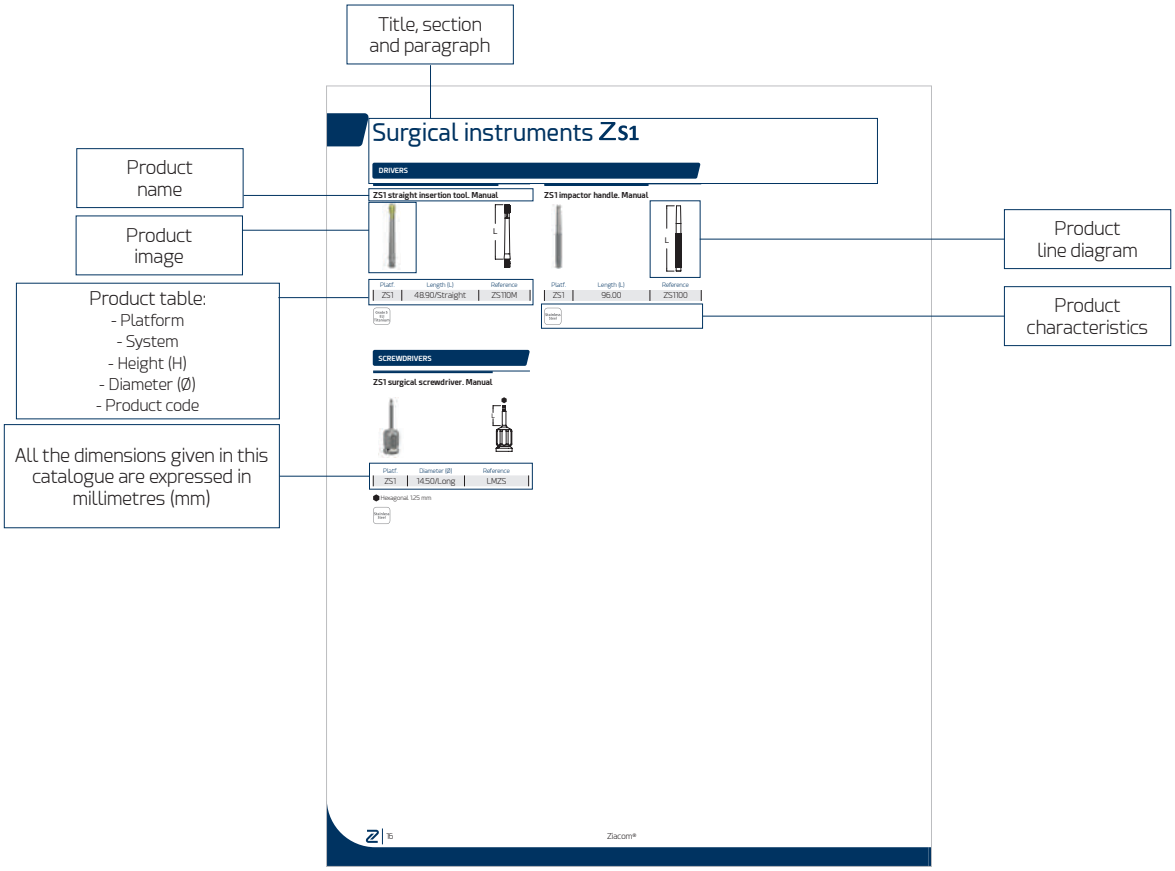

Symbology

Symbol	Meaning
ROT	Rotatory element
NO ROT	Non-rotatory element
	Use with manual torque
XX Ncm	Maximum operating torque
Ncm 10 20 30 40 50 60 70	Ratchet torque range
Galaxy	Galaxy connection
1,25mm	Screw connection
Kirator	Kirator connection
N Nature	Nature connection
Basic	Basic connection
XDrive	XDrive connection

Symbol	Meaning
	Tx30 connection
MX,XX	Size in millimetres
45°	45° screw support
90°	90° screw support
	Use in rotation with a CA
XX Rpm	Maximum rotation speed
XX USES	Maximum number of uses
	Single-use product
Grade 5 ELI Titanium	Made from grade 5 ELI (extra-low interstitial) titanium
Grade 2 Titanium	Made from grade 2 titanium
Stainless Steel	Made from stainless steel

Symbol	Meaning
Steel	Made from steel
Co-Cr +castable	Made from cobalt-chromium + castable plastic
Cobalt Chromium	Made from cobalt-chromium
PEEK	Made from PEEK
Full castable	Made from castable plastic
Plastic	Made from plastic
XX°	Recommended sterilisation temperature
Non sterile	Unsterilised product
	Use with abundant irrigation
XX°	Maximum angle

Ziasure

Surgical instruments ZS1

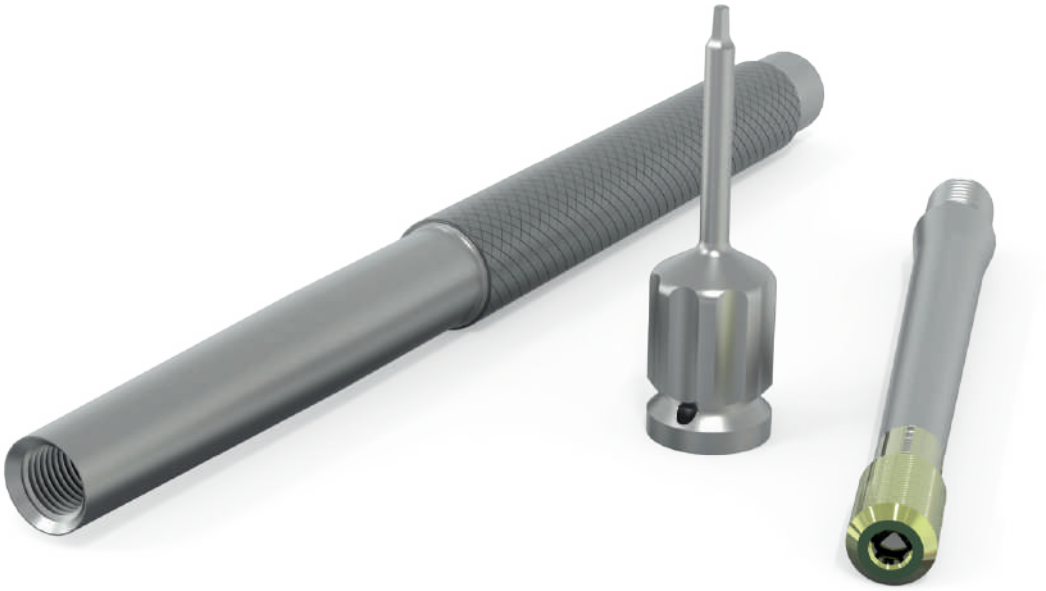

Surgical instruments ZS1

DRIVERS

ZS1 straight insertion tool. Manual

Platf.	Length (L)	Reference
ZS1	48.90/Straight	ZS110M

Grade 5 ELI Titanium

ZS1 impactor handle. Manual

Platf.	Length (L)	Reference
ZS1	96.00	ZS1100

Stainless Steel

SCREWDRIVERS

ZS1 surgical screwdriver. Manual

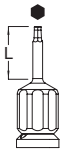

Platf.	Diameter (Ø)	Reference
ZS1	14.50/Long	LMZS

⬢ Hexagonal 1.25 mm

Stainless Steel

Surgical protocol ZS1

Surgical protocol ZS1

It is important to consider that Ziasure ZS1 fixation pins should be placed into alveolar bone and the placement protocol will depend on the fixation required, the type of bone, the type of membrane or graft, the position of tooth roots and other anatomical structures.

Steps for placing ZS1 fixation pins

Ziasure

- **EXAMPLE:**
  Ziasure ZS1
  fixation pins
  Ø0.70x3.30mm

INTRODUCTION | Material required

1. ZS1 Straight insertion tool (Reference ZS110M)
2. ZS1 impactor handle (Reference ZS1100)
3. ZS1 surgical screwdriver (Reference LMZS)

STEP 1

Take the impactor handle in the palm of your hand and screw the straight insertion tool in until it is secure.

STEP 2

Use the Impactor handle with the insertion tool to insert the Ziasure ZS1 fixation pin by exerting pressure on the pin head, ensuring that it is tight.

NOTE
Remove the yellow protector from the insertion tool prior to use.

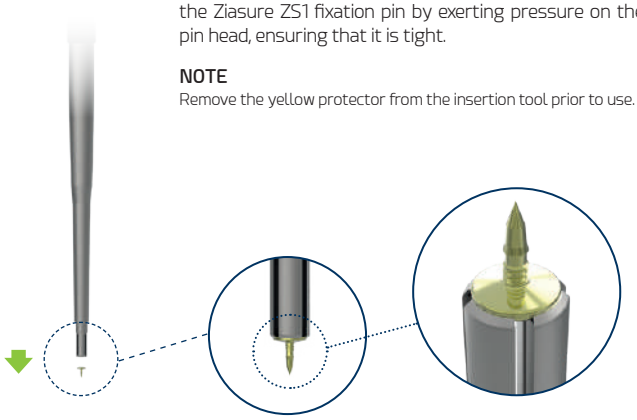

STEP 3

After placing the membrane in the desired position, select the site for the Ziasure ZS1 fixation pin and place it perpendicular (90° angle) to the surface.

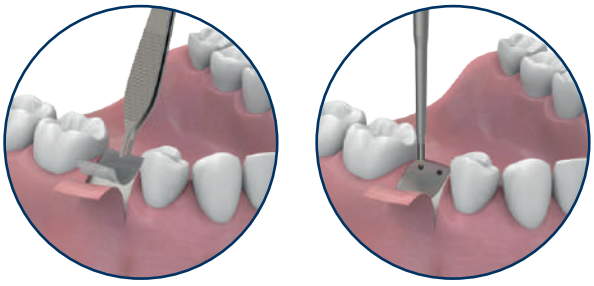

STEP 4

By gently tapping the impactor handle, insert the Ziasure ZS1 fixation pin until the base of the head comes into direct contact with the membrane.

STEP 5

Remove the impactor with extreme care to avoid any lateral movements that may affect its stability.

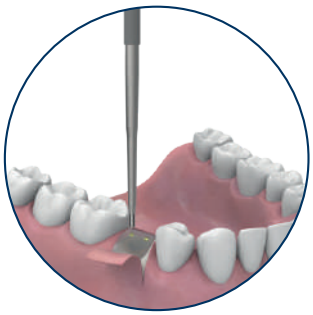

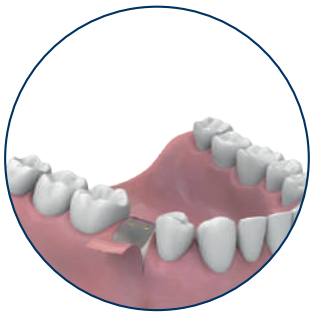

NOTE
In order not to affect the stability of the Ziasure ZA1 fixation pin, it is best to insert a scalpel blade into the impactor slot and to use this blade to hold the pin in position while removing the impactor.

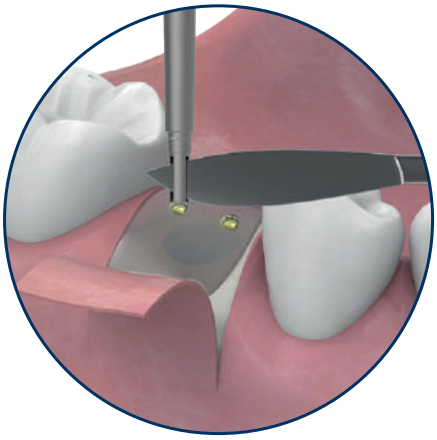

STEP 6

On completing the bone regeneration treatment, remove the fixation pin by using the screwdriver to turn the fixation pin slightly anti-clockwise and, using tweezers, remove it from the surgical area.

NOTE
The time to remove the pin will depend on the type of biomaterial used in the bone regeneration procedure.

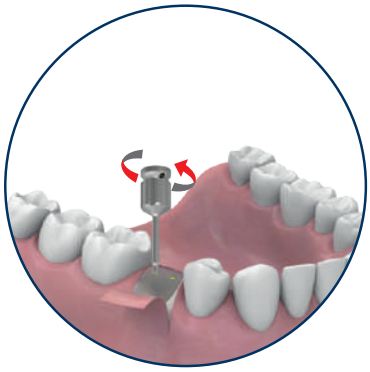

Ziasure

Zs2

Short bone fixation screws

Short bone fixation screw Zs2

Ziacom® Ziasure ZS2 fixation screws are designed to be used in Guided Bone Regeneration (GBR) procedures as devices for securing and immobilisation of bone or soft tissue grafts, resorbable and non-resorbable membranes.

Features

RETENTION ZONE

- Flat base: improves membrane fixation and stability.
- Torx connection: facilitates insertion and removal once the treatment is finished.

BODY

- Anchorage area: improves stability of the pin.
- Threaded area: facilitates removal of the fixation pin once treatment has finished.
- Overall lengths: 3.60 / 4.60 / 5.60 mm.

TIP

- Sharp tip: allows insertion into soft and hard bone without drilling.

MATERIAL

- Grade 5 ELI titanium (medical grade) Ti 6Al 4V

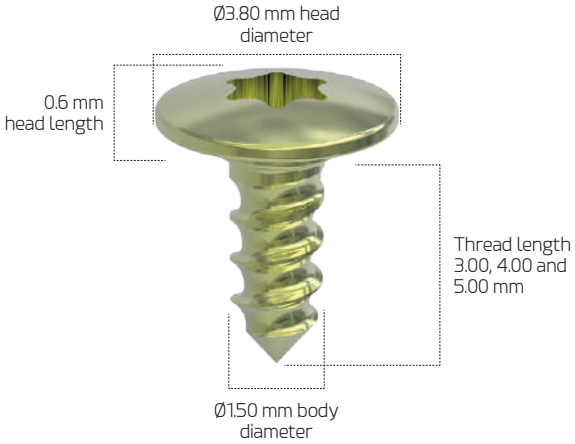

Recommendations for use

- Ziacom® Ziasure® ZS2 short bone fixation screws are indicated for fixation and stabilisation of both resorbable and non-resorbable membranes during Guided Bone Regeneration (GBR) procedures.
- Fixation of collagen, synthetic and PTFE (with or without Ti reinforcement) membranes in Seibert class I and II bone.
- Fixation of grafts in bone regeneration procedures and mucogingival surgery.

NOTE
It is recommended ZS2 fixation pins be removed once treatment has finished. Maximum duration of use is 12 months.

Diameters, lengths and product codes

						REFERENCES	
		DIAMETER	LENGTH	HEAD Ø	ANODISED	5 UNITS	10 UNITS
Ziasure ZS2 short bone fixation screw		1.50	3.00	3.80		PS150305	PS150300
			4.00			PS150405	PS150400
			5.00			PS150505	PS150500

Dimensions in mm.

IMPORTANT
Ziasure ZS2 fixation pins are supplied unsterilised.

Short bone fixation screw Zs2

Product presentation

Ziasure ZS2 short bone fixation screws come in a carton sealed with a product label, allowing immediate identification. Each box contains:

- **Ziasure ZS2 short bone fixation screw blister pack**: heat-sealed, with product labels for correct traceability. There is a flap for easy opening in the surgery while preventing accidental opening.
- **Product label information:** product code, diameter and length of the Ziasure ZS2 short bone fixation screws, product description, batch number, manufacturer, date of manufacture and symbols identifying the product.

IMPORTANT
Ziasure ZS2 short bone fixation screws must not be sterilised in their original packaging or with the plastic vial.

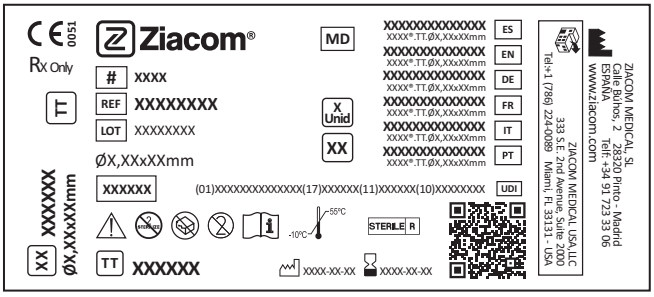

Description of the symbology used

CE 0051	CE marking (MDR) and notified body number.		Do not use if package is damaged.
MD	Medical device symbol.		Single-use product.
#	Model code.		Consult instructions for use.
REF	Product name.		Product use-by date.
LOT	Product batch number.		Date of manufacture.
UDI	Unique device identifier.		Manufacturer.
STERILE R	Sterilised by radiation.	TT	Titansure surface treatment.
	Temperature limit.	TTA	Titansure Active surface treatment.
	Caution, consult attached documentation.	Rx Only	Prescription only.
	Do not resterilise.		Product distributor.

For full details on the product presentation and instructions for use (IFU), go to **www.ziacom.es/ifus** or scan the QR code on the box.

Instructions for opening ZS2 short screws

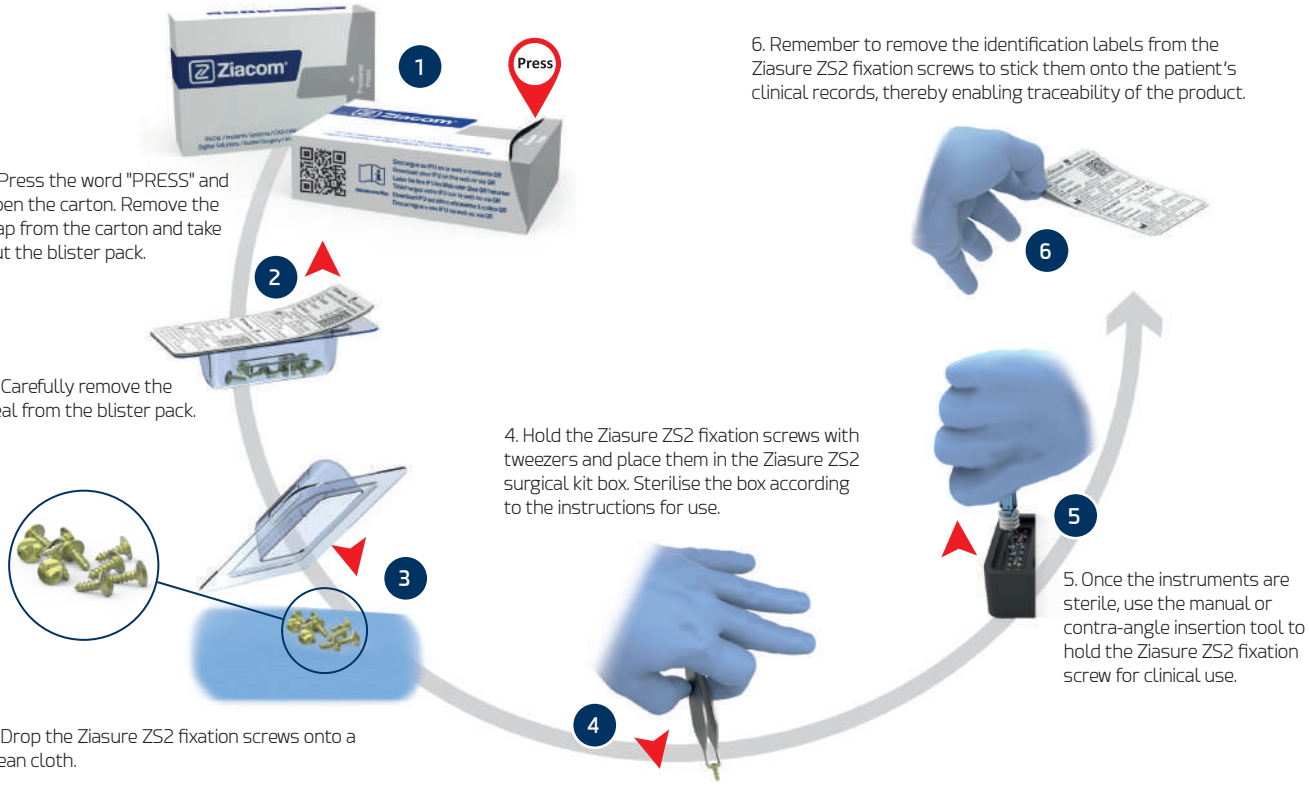

1. Press the word "PRESS" and open the carton. Remove the flap from the carton and take out the blister pack.

2. Carefully remove the seal from the blister pack.

3. Drop the Ziasure ZS2 fixation screws onto a clean cloth.

4. Hold the Ziasure ZS2 fixation screws with tweezers and place them in the Ziasure ZS2 surgical kit box. Sterilise the box according to the instructions for use.

5. Once the instruments are sterile, use the manual or contra-angle insertion tool to hold the Ziasure ZS2 fixation screw for clinical use.

6. Remember to remove the identification labels from the Ziasure ZS2 fixation screws to stick them onto the patient's clinical records, thereby enabling traceability of the product.

IMPORTANT
Ziasure ZS2 fixation screws are supplied unsterilised.

Surgical instruments ZS2

Surgical instruments Zs2

DRIVERS

ZS2 insertion tool. Manual

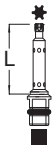

Type.	Length (L)	Reference
ZS2	14.50	ZS210M

✱ Torx connection / ■ Square connection 4x4 mm

Stainless Steel

ZS2 insertion tool for insertion tool handle

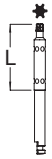

Type.	Length (L)	Reference
ZS2	15.00	ZS220M

✱ Torx connection

Stainless Steel

ZS2 insertion tool. CA

Type.	Length (L)	Reference
ZS2	14.50	ZS300M

✱ Torx connection

Stainless Steel

INSERTION TOOL HANDLE

ZS2 insertion tool handle

Type	Length (L)	Reference
ZS2	110.00	MDSQ

Plastic Stainless Steel

Surgical protocol Zs2

Surgical protocol Zs2

It is important to consider that Ziasure ZS2 fixation screws should be placed into alveolar bone and the placement protocol will depend on the fixation required, the type of bone, the type of membrane, mesh membrane or graft, the position of tooth roots and other anatomical structures.

Steps for placing ZS2 short screws

Ziasure

- **EXAMPLE:**
  Ziasure ZS2 short fixation screws Ø1.50x4.00 mm

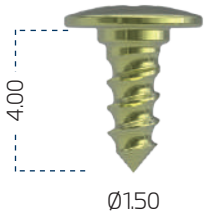

INTRODUCTION | Material required

1. Ziasure ZS2 manual insertion tool (Reference ZS210M)
2. ZS2 insertion tool for manual insertion tool handle (Reference ZS220M)
3. Ziasure ZS2 CA insertion tool (Reference ZS300M)
4. ZS2 manual insertion tool handle (Reference MDSQ)

STEP 1

Hold the insertion tool handle at its widest point in the palm of your hand and use your index finger and thumb to pull back the ring. Push the Ziasure ZS2 insertion tool in until it is correctly seated and let the ring go.

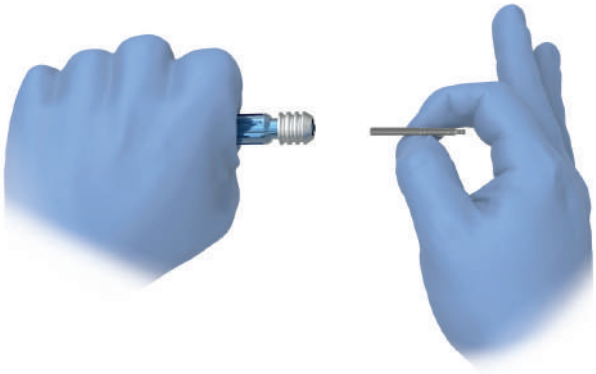

STEP 2

Use the Ziasure ZS2 insertion tool with the insertion tool handle or the Ziasure ZS2 insertion tool for contra-angle to pick up the Ziasure ZS2 short fixation screw. Make sure the screw is tight.

STEP 3

Once the membrane, mesh membrane or graft is in position, select the site where fixation is required and place the Ziasure ZS2 short fixation screw perpendicular (90° angle) to the surface.

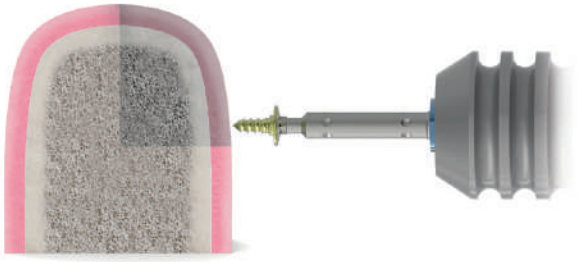

STEP 4

Exert firm pressure and turn the Ziasure ZS2 insertion tool in the handle clockwise with the contra-angle set to a rate of 25 rpm using a torque of 15 Ncm or less.

NOTE
Use of more than one ZS2 fixation screw is recommended to stabilise the membrane, titanium mesh membrane or graft.

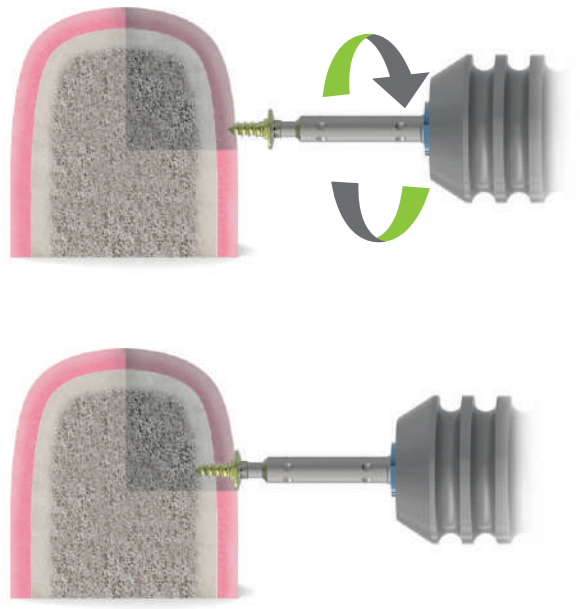

STEP 5

On completing the treatment, turn the fixation screw anti-clockwise using the Ziasure ZS2 insertion tool and, using tweezers, remove the fixation screw from the surgical area.

NOTE
The time to remove the pin will depend on the type of biomaterial used in the bone regeneration procedure.

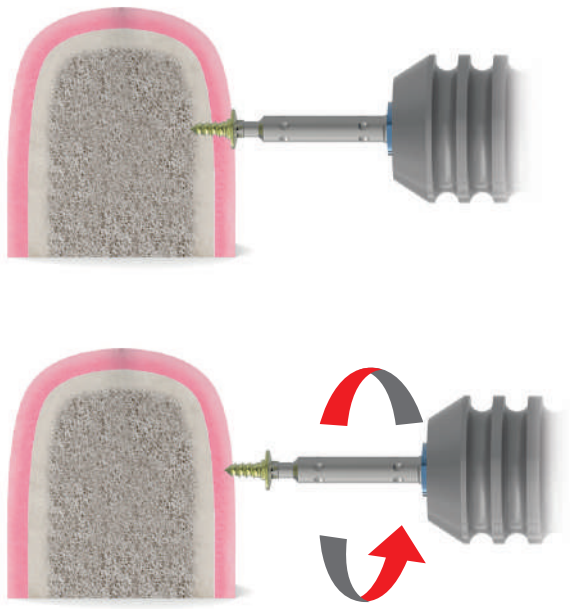

Ziasure

Other products

Other products

Graduated trephines

Ziacom® graduated trephines are designed to harvest autografts and take bone tissue biopsies, and to remove failed dental implants.

Their reduced wall thickness and DLC (Diamond Like Carbon) coating ensure greater strength and durability with a smaller cutting diameter, allowing more of the bone tissue to be preserved, especially in cases requiring implant removal.

Their apical region has optimised cutting angles that facilitate osteotomies and increase the accuracy of cuts, reducing surgical trauma to the bone. They also have graduations at 2/4/6/8/10 mm, which makes it easier for the surgeon to determine the depth at which he or she is working.

45 USES

Rpm Iniciales 60-100 | Rpm Máximas 1200-1500

Kit of 4 graduated trephines
Product code: **KTD100**

	GRADUATED TREPHINES			
REFERENCE	OFC35	OFC40	OFC45	OFC50
TOTAL DIAMETER (CUTTING RADIUS)	4.35	4.95	5.30	5.90
INTERNAL DIAMETER	3.55	4.15	4.55	5.15

Dimensions in mm.

It is important to consider that Ziasure ZS2 fixation screws should be placed into alveolar bone and the placement protocol will depend on the fixation required, the graft to be fixed, the position of tooth roots and other anatomical structures.

Expanders

The Ziacom® Expander Kit offers dental clinicians expanders in progressive diameters which can be used consecutively to compress and expand low-density bone and perform split-crest procedures.

The morphology of our laser-marked, differentially designed expanders, in a wide range of shapes, sizes and types, makes the Ziacom® Expander Kit a powerful ally of the dental surgeon.

Product codes and dimensions

	BONE EXPANDERS						SINUS LIFT BONE EXPANDER
CODE	1	2	3	4	5	6	7
EXPANDER KIT							
Reference	EOX100	EOX200	EOX300	EOX400	EOX500	EOX600	EOX700
END/NECK Ø	2.00	2.35	2.85	3.10	3.40	3.80	3.40
TIP/APEX Ø	1.50	1.80	2.50	2.35	2.50	2.70	2.50
INSTRUMENT LENGTH	23.40	23.40	23.40	23.40	23.40	23.40	23.40
ACTIVE LENGTH	14.50	14.50	14.50	14.50	14.50	14.50	14.50
APEX LENGTH	2.00	2.00	2.00	2.00	2.00	2.00	1.00
TOTAL Ø	2.50	2.85	3.20	3.55	3.90	4.25	4.00
IMPLANT Ø	NO END	NO END	3.30	3.60/3.70	4.00	4.30/4.40	4.00

Dimensions in mm.

NOTE
Bone expanders must be used sequentially according to the insertion protocol.

GENERAL FEATURES OF BONE EXPANDERS

- Head compatible with 4x4 mm ratchet
- 14.5 mm long active section
- Thread design
- Optimised shape
- Laser-marked expander
- Atraumatic tip

SPECIFIC FEATURES OF THE SINUS LIFT EXPANDER

- With acute edges to facilitate compression of the cortical bone surrounding the sinus membrane and a concave centre to collect bone tissue, which reduces the risk of sinus membrane perforation.

Ziasure

Cleaning, disinfection and sterilisation

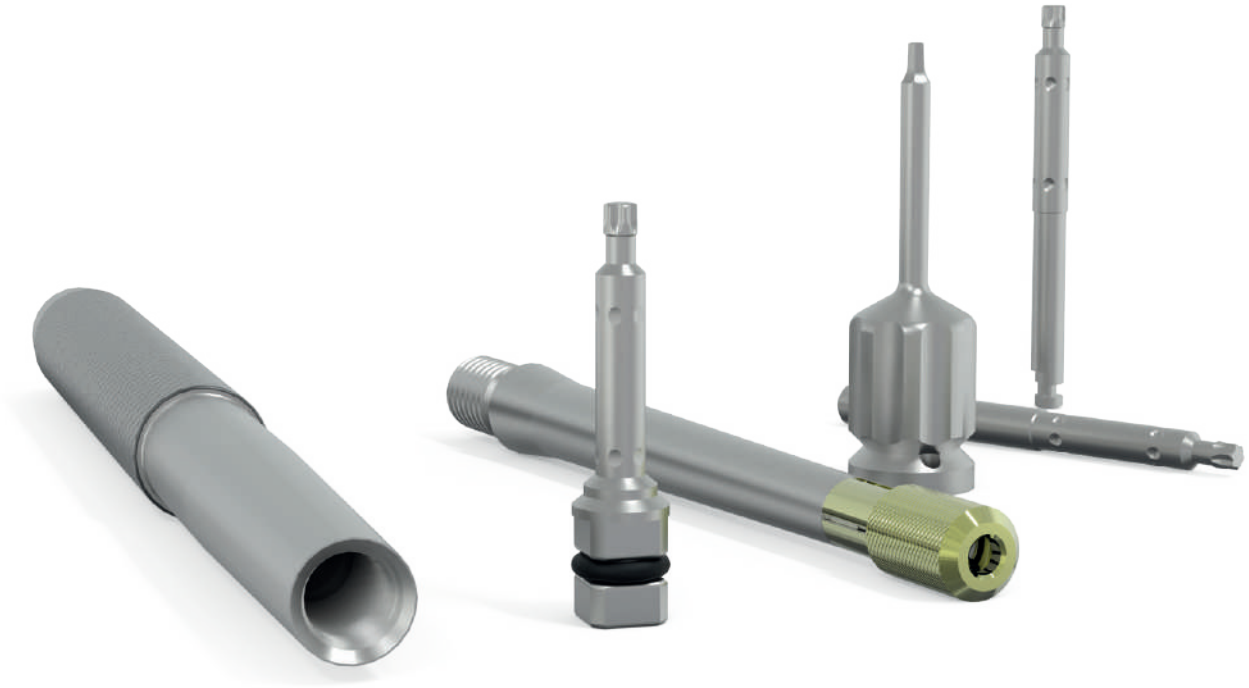

Cleaning, disinfection and sterilisation

The protocols described in this section must only be carried out by personnel qualified to clean, disinfect and sterilise the dental materials specified herein.

Cleaning and disinfection instructions

Applicable for surgical and prosthetic instruments and boxes.

Disassembly

1. Disassemble* the instruments that need to be cleaned and disinfected, such as manual ratchets, drills or drill stops.
2. Remove all the different components from the surgical or prosthetic kit box for correct cleaning.

Cleaning and disinfection

For disinfection of instruments and surgical kit boxes:

1. Submerge the instruments in a detergent/disinfectant solution** suitable for dental instruments to help eliminate any adhered biological residues. If an ultrasound bath is available***, confirm that the detergent/disinfectant solution is indicated for use with this type of equipment.
2. Manually remove any biological residues with a non-metallic brush and pH-neutral detergent.
3. Rinse with copious water.
4. When cleaning surgical and prosthetic kit boxes, always use a pH-neutral detergent and non-abrasive tools to avoid damaging the surface of the boxes.
5. Dry the materials with disposable, lint-free, cellulose cloths or compressed air.

For disinfection of plastic caps and the protective disk:

1. Submerge for 10 minutes in a neat benzalkonium chloride solution.
2. Rinse with distilled water.
3. Dry the caps and disk prior to use.

Inspection

1. Check that the instruments are perfectly clean; if not, repeat the cleaning and disinfection steps.
2. Discard any instruments with imperfections and replace them before the next surgery.
3. Check that the instruments and surgical and prosthetic kit boxes are perfectly dry before reassembling the parts and proceeding with sterilisation.

* See the assembly and disassembly manuals at **www.ziacom.com/biblioteca**

** Follow the instructions from the disinfectant's manufacturer to determine the correct concentrations and times.

** Follow the instructions from the ultrasound bath's manufacturer to determine the correct temperature, concentration and times.

Sterilisation instructions for steam autoclaves

Applicable to orthodontic implants, abutments, kit, surgical and prosthetic boxes, pins, fixing screws and mesh membranes.

1. Place the material in individual sterilisation pouches and seal the pouches. For joint sterilisation, place the instruments in their surgical kit box, place the box in a sterilisation pouch and seal the pouch.
2. Place the pouches to be sterilised in the autoclave.
3. Sterilise in a steam autoclave at 134°C/273°F (max. 137°C/276°F) for 4 min (minimum) at 2 atm. Dynamometric torque wrenches must be sterilised in 3 vacuum cycles at 132°C/270°F for at least ≥ 4 minutes and vacuum dried for at least 20 minutes.

For the United States only: The validated and recommended sterilisation cycle for the US must be performed in a steam autoclave at 132ºC/270°F for at least 15 minutes with a drying time of at least 15-30 minutes.

IMPORTANT
Make sure the drying stage is allowed to run to completion, otherwise the products may be damp.
Check the sterilisation equipment if the materials or sterilisation pouches are damp at the end of the sterilisation cycle.
Perform the necessary maintenance actions on the autoclave according to the established periodicity and following the manufacturer's instructions.

Storage of Ziacom® products

- Store the products in their original packaging in a clean, dry place until they are to be used.
- After sterilisation, keep the products in the sealed sterilisation pouches in a clean, dry location.
- Never exceed the use by date indicated by the manufacturer of the sterilisation pouches.
- Always follow the instructions of the manufacturer of the sterilisation pouches.

General recommendations

- Never use damaged or dirty material; never reuse single-use products. The user is responsible for following the instructions described in this document correctly.
- Pay attention to piercing or sharp elements. Gloves should be worn when cleaning the materials to avoid accidents during handling.
- Follow the safety instructions indicated by the manufacturer of the disinfectant.
- The product's sterility cannot be guaranteed if the sterilisation pouch is open, damaged or damp.
- Respect all stages of the sterilisation process. If the materials or sterilisation pouches contain traces of water or moisture, check the autoclave and repeat the sterilisation.
- Orthodontic abutments and implants are supplied UNSTERILISED and must always be sterilised before use.
- Instruments and surgical and prosthetic kit boxes are supplied UNSTERILISED and must always be sterilised before use and cleaned and disinfected after use.
- Sterilisation, cleaning and disinfection processes gradually deteriorate the instruments. Inspect the instruments thoroughly to detect any signs of deterioration.
- Avoid contact between products made from different materials (steel, titanium, etc.) during the cleaning, disinfection and sterilisation processes.
- Ziacom Medical SL recommends these instructions are implemented for the correct maintenance and safety of their products; accordingly, the company refuses any liability for any damage to the products that could arise if the user applies alternative cleaning, disinfection and sterilisation procedures.

See the latest version of the cleaning, disfection and sterilisation instructions at **www.ziacom.com/biblioteca**

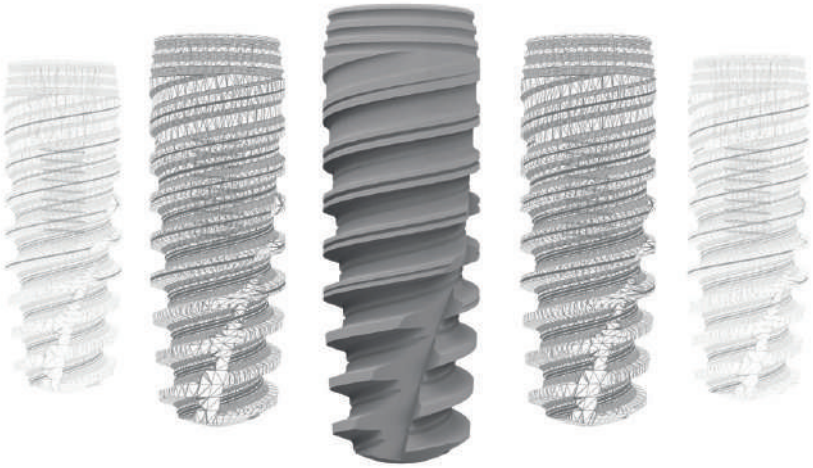

See the updated general conditions of sale at **www.ziacom.com**.

Check the availability of each product in your country.

All rights reserved. No part of this document may be reproduced or stored in any medium or reproduction system, nor transmitted in any way or under any concept, electronically, mechanically, in photocopies, recording or any other mean not considered here without the permission of holder of the copyright, editing and printing. Ziacom® is a registered trademark of Ziacom Medical SL.

See the latest version of the catalogues at **www.ziacom.com**.

ENGLISH | EN

www.ziacom.com

Ziacom®
A Ziacom Group Company